Wall Hung Smart Toilet

Model G21

Enable the enjoyment



THE FUNCTION TABLE

110v/220v English Version	Cleansing Position Adjustment
Prevent Splashing When Defecating	Defecating Assist Cleansing
Tank concealed in the wall	Child Cleansing
Foot Sensor Flushing	Water Temperture Adjustment
Radar Sensor	Water Pressure Adjustment
Automatically Open/Close the Lid	Self-cleaning Nozzle
Automatically Flushing	Double Filtration
Spin Button Control	Instant Water Heating
Manual Flushing Without Power	Leakage Protection
Night Lighting	High Temperature Ceramic Body
Display Screen	
Smart Remote Control	Energy Conservation Mode
Heated Seat	Mobile Cleansing
Seat Temperature Adjustment	Nano-antibacterial Glaze
Buffer Cover Plate	Massage Cleansing
Warm Air Drying	Automatic Cleansing,
Air Temperature Adjustment	Foam Shield Prevent Splashing
Female CleansingButtocks Cleasing	UV sterilization

More easy to clean

360 degree all-around cleaning,
refuse to hide dirt.



Hidden water tank

No water pressure limit.
Perfect solution to flushingpressure problem



Super support and stable

Coexisting strengthened support,
strengthenedtreatment,
support can reachthe bearingcapacity of 400kg.



INTELLIGENT KNOW YOU MORE

Fully automatic sensing

Bring Convenience to Your Busy Life.





Radar induction, automatic flip cover when the human approaches (can be switched to automatic flip cover or foot sensor).



Close to the foot button,automatically open / turn over the seat ring (automatically flip over).



Automatically flush and close the seat cover after the person leaves.

Induction flush

Automatic flushing, Foot sensor flushing





The human body leaves the seat and the toilet flushes automatically.



Extend your foot, the toilet automatically senses flushing.

UV Sterilization

Built-in UV lamp in spray gun

Urinal sterilization

Automatically extend the spray rod when the cover is closed Sterilize.

Mobile sterilization

The spray rod can be moved and adjusted to expand the scope of sterilization.

Spray gun self-disinfection

The spray gun is retracted and self-disinfected, avoiding cross-infection.



Safe sterilization

The germicidal lamp is turned on when the lid is closed, and the germicidal lamp is automatically powered off when the lid is opened.



Smart cleaning

3 levels of water pressure adjustment
4 levels of water temperature adjustment
5 levels of position adjustment



Women cleaning

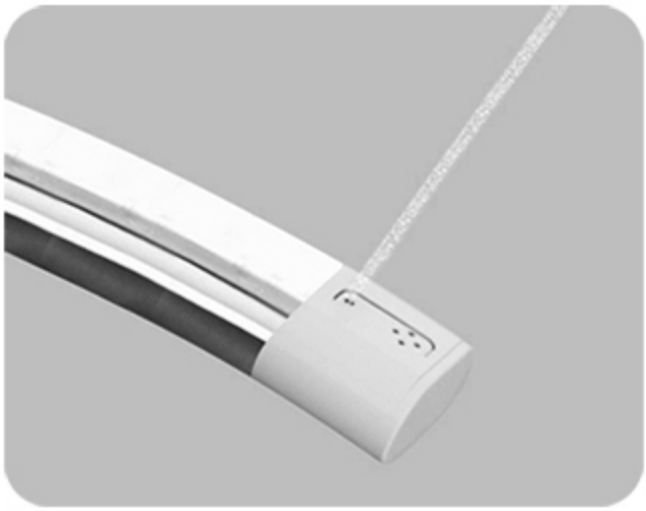

Defecation massage



Buttocks washing

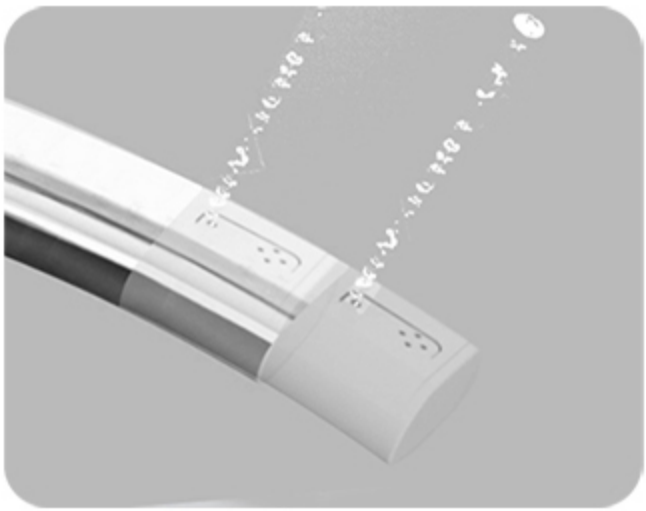

Mobile cleaning

Instant heating

Normal temperature,34℃,37℃,40℃,Four levels of water temperature regulation.Instant water heating without waiting. It’ s more hygeian.

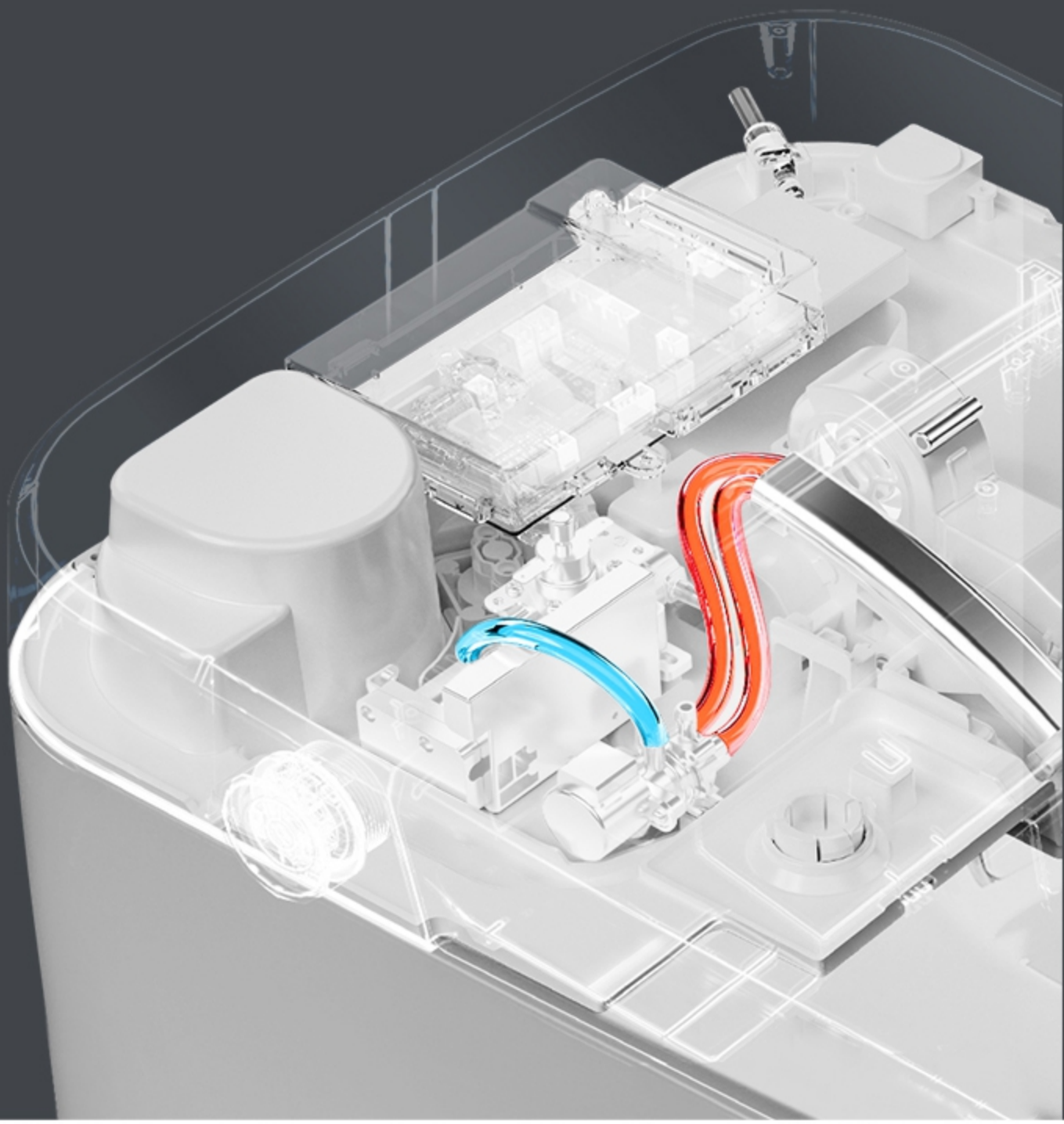

Prevent splashing when defecating

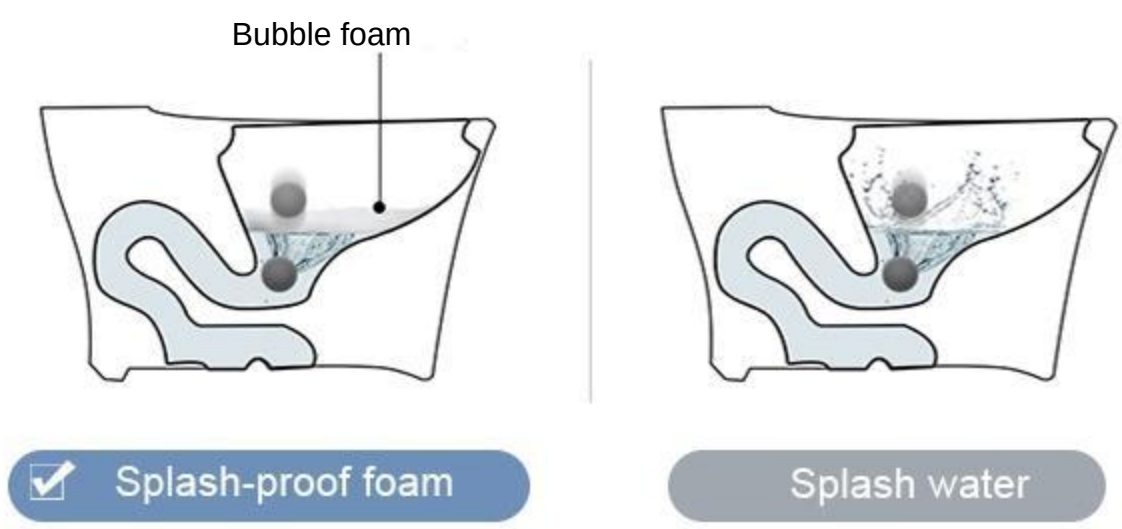

Seat cover heating

Intelligent temperature seat cover.
Normal temperature,34℃,37℃,40℃.



Warm air drying

Normal temperature, 40℃, 46℃, 50℃,
Four levels of temperature regulation

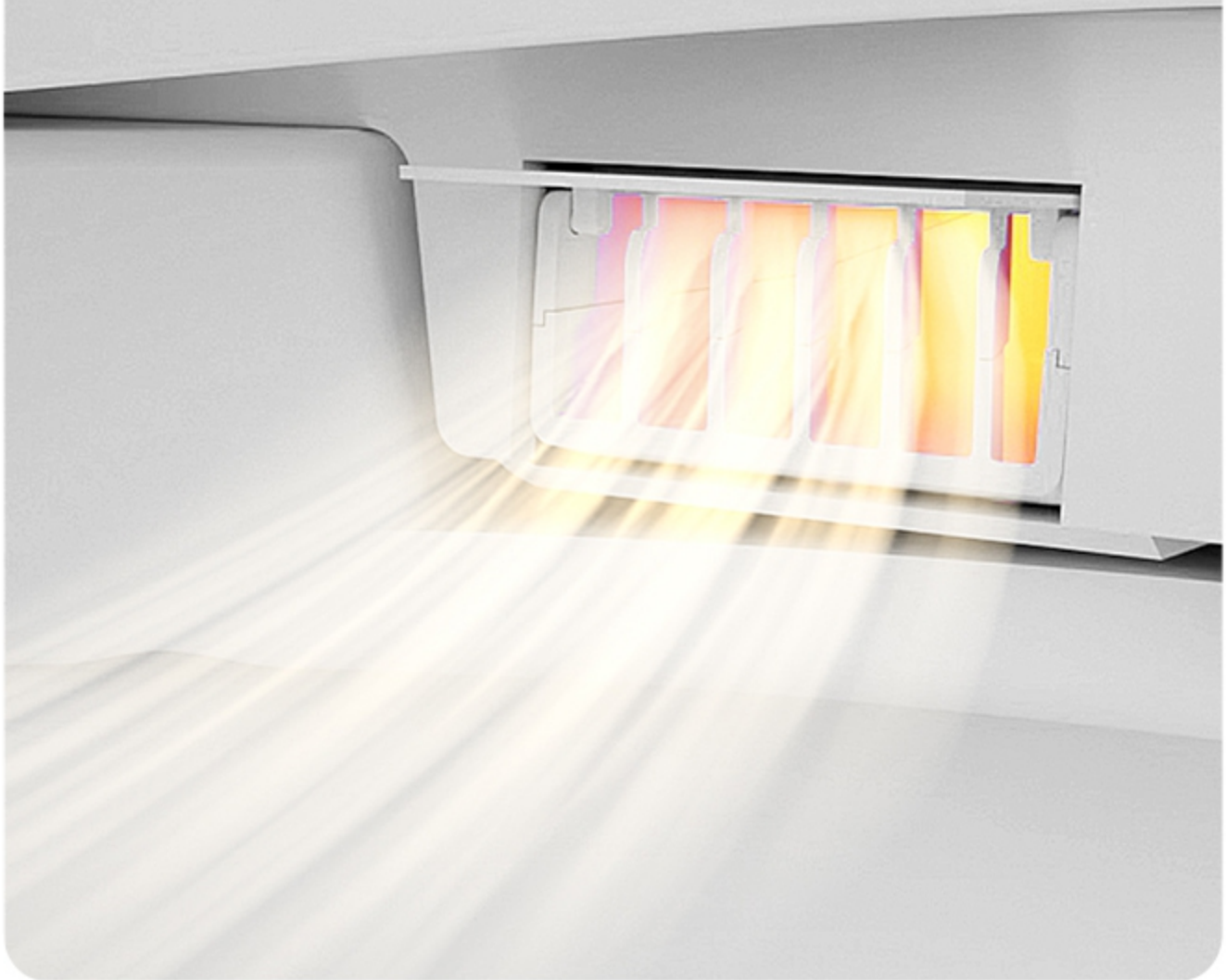

Intelligent remote control

It can be used in any direction



Spin Button Control

Spin Button Control with Multiple Functions.





Turn counterclockwise to use the bidet function.



Once click to stop, double click to dry after power on, once click to flush after power off.



Rotate clockwise to use buttocks cleaning function.

HD display

Spin Button Control with Multiple Functions.



Electric leakage protection

Socket automatic detection, leakage will automatically cut off the power supply.





Mute mode seat cover



Night lighting

PRODUCT SIZE

Unit :mm

Smart toilet size



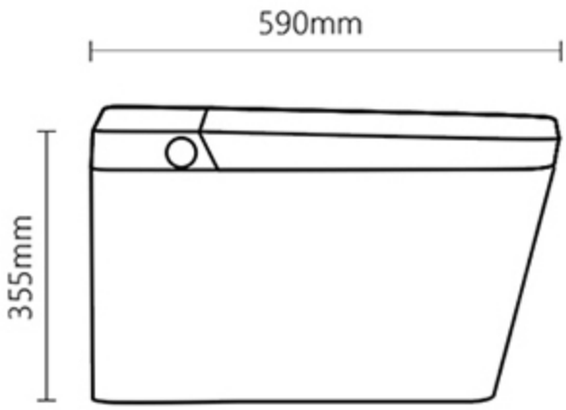

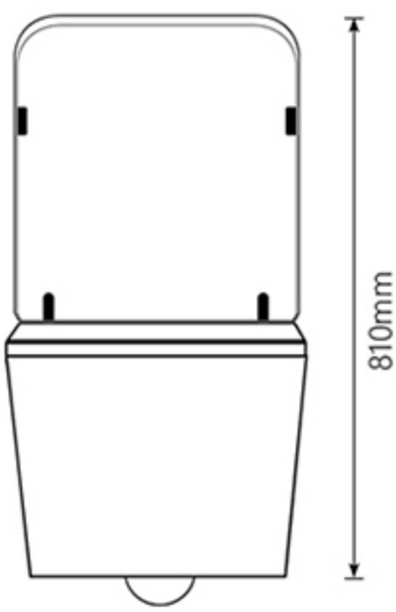

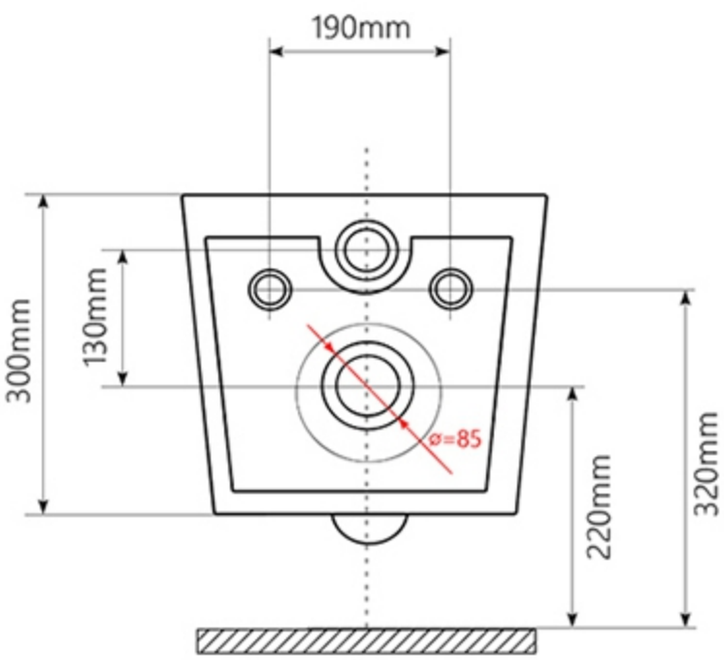

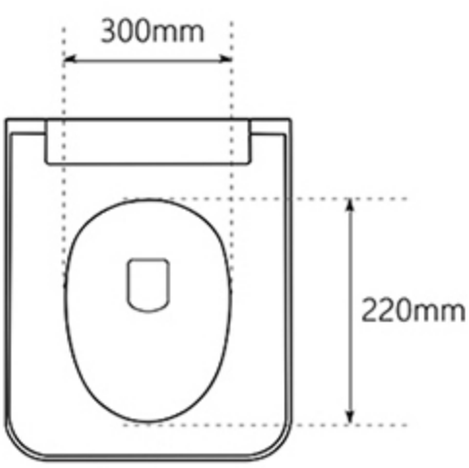

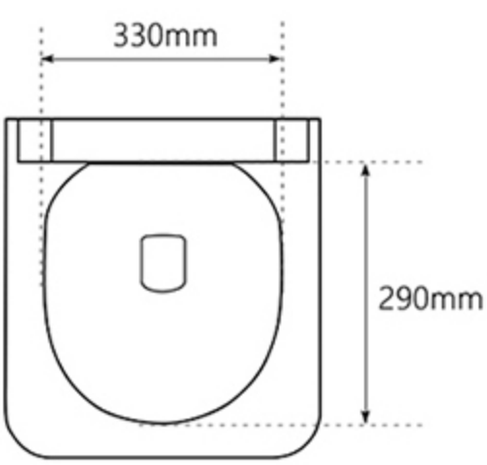

Low water tank size

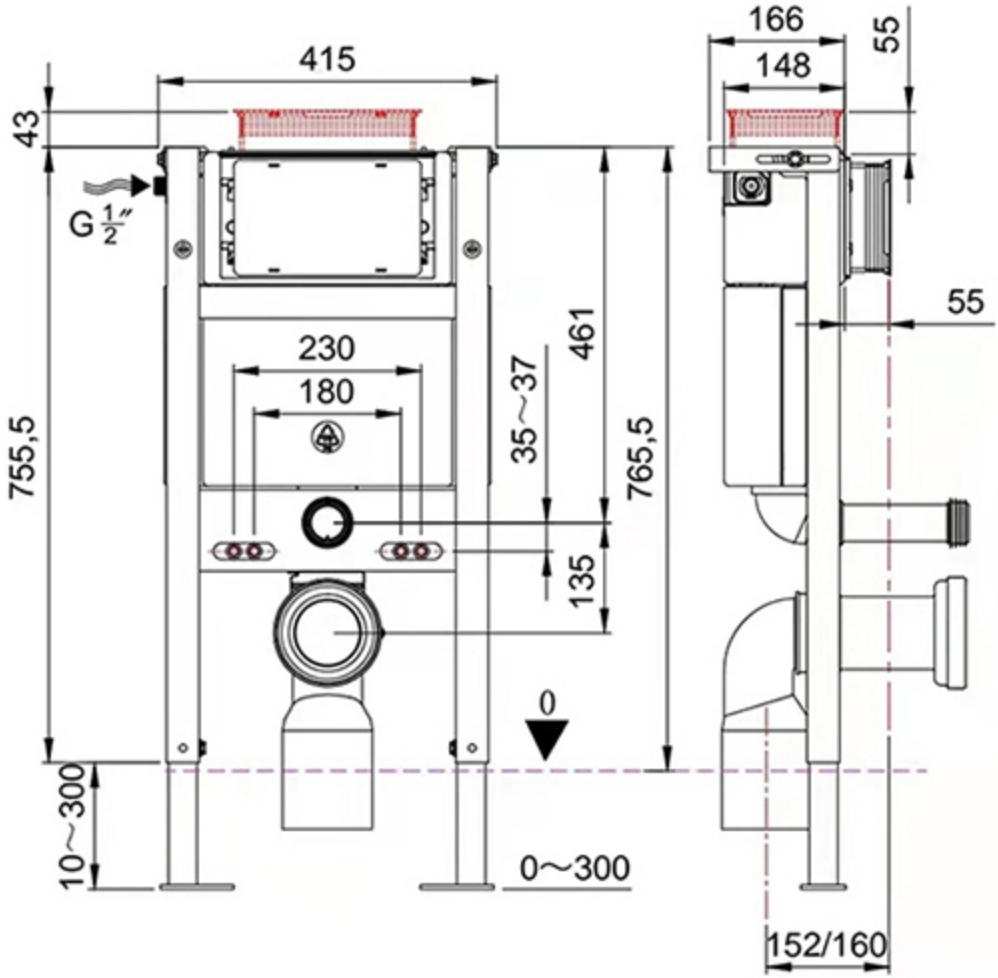

Tall Water Tank Size

mm

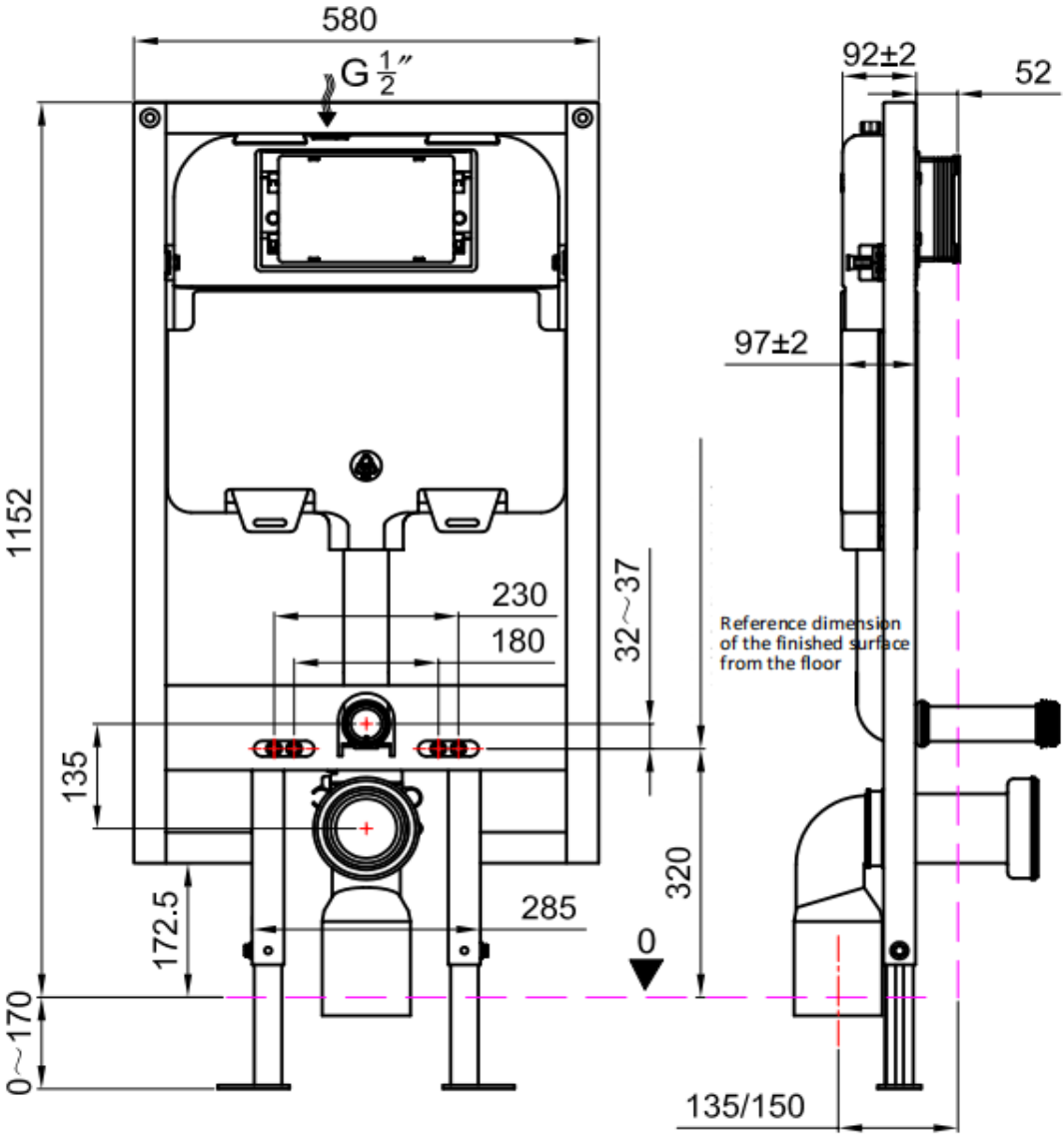

Two installation methods

You can choose the installation method according to your needs.

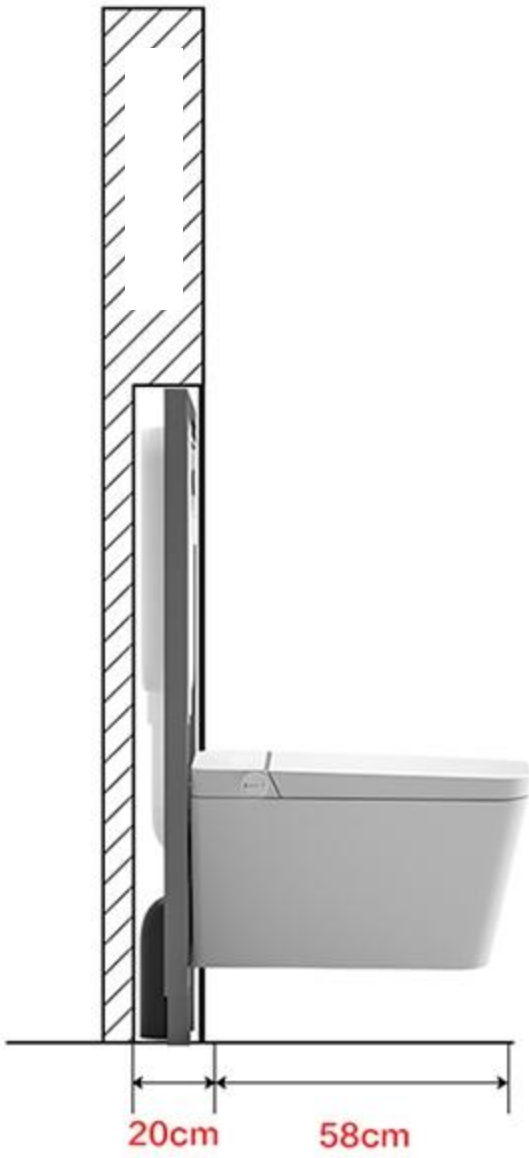

In-wall installation

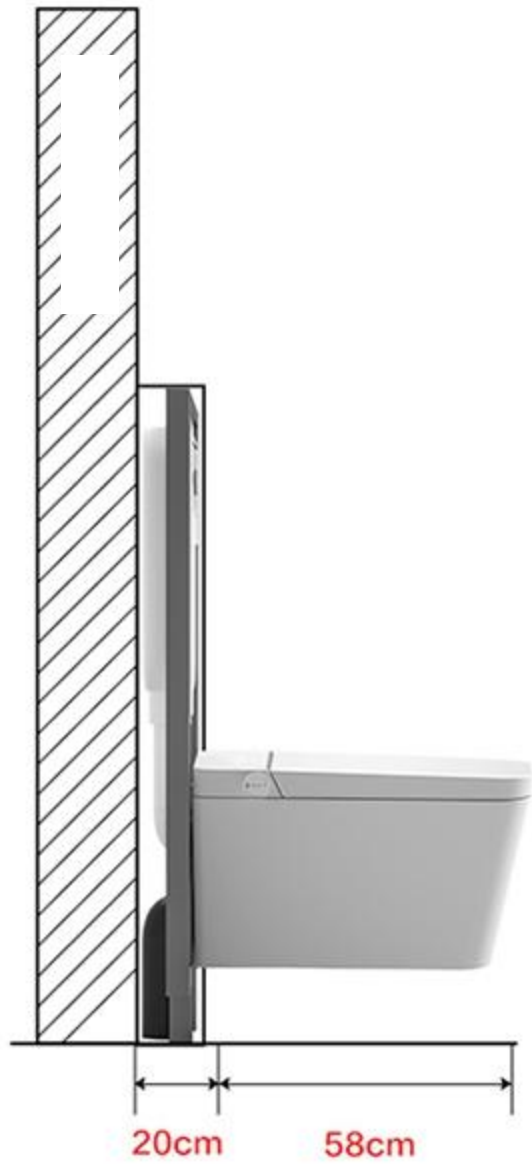

False wall installation

PRODUCT DISPLAY




Easy
maintenance

